85 LIVINGSTON

News and Information

COMMERCIAL SPACE UPDATES

Per the annoucement in July, the Board of Directors is thrilled to announce that we have received the signed lease and deposit for our commercial space.

Our new tenant, Gym NYC, is a fitness club focused on personal training. They already have two successful locations in Manhattan.

BUILDING EVENT



85 Liv Knowledge Base

New to the building or looking for details for an upcoming project? Check out 85liv.com for FAQs, renovation requirements, previous newsletters, and more!



Board Members

Richard Shelala
Richard Currie
Lindsey Elias
Matt Kaplan
Corey Klar
Cary Shapiro
PaulaMarie Susi

Resident Spotlight

Created by 10 year resident, Films on Sunday with Lee Liberman features movie reviews especially (but not always) related to history and politics.



85 LIVINGSTON

News and Information

BUILDING GYM AND OTHER BACK-OF-HOUSE UPGRADES

We are excited to announce that the back-of-house project will begin soon. The architect and contractor have been visiting the site, and we have finalized most of the project's details. We anticipate completion by December.

The gym will be accessible through the mailroom via a ramp. Miguel will have a new office space and we will be adding a lobby-level restroom and a water bottle filling station.

The look and feel of the space will reflect our lobby design, creating a cohesive aesthetic from the front to the back of the house.

We worked with a gym consultant to optimize the space for both cardio and weight training. To the right is the tentative equipment plan, with corresponding numbers.

We also plan to add kettlebells, resistance bands, and mats. We've left enough floor space for stretching and mat exercises, and we may adjust the layout (or add equipment) as needed.

We understand that with limited space, we may be unable to meet everyone's preferences. However, we want to give residents the chance to weigh in. Do you think a rowing machine or stationary bike would be a better fit than a recumbent bike? Now is the time to let us know!

Gym Equipment Plan

1. Two treadmills
2. Elliptical machine
3. Recumbent bike
4. Dual adjustable pulley machine
5. Two adjustable benches
6. Dumbbell rack
7. Medicine ball rack
8. Barbell rack

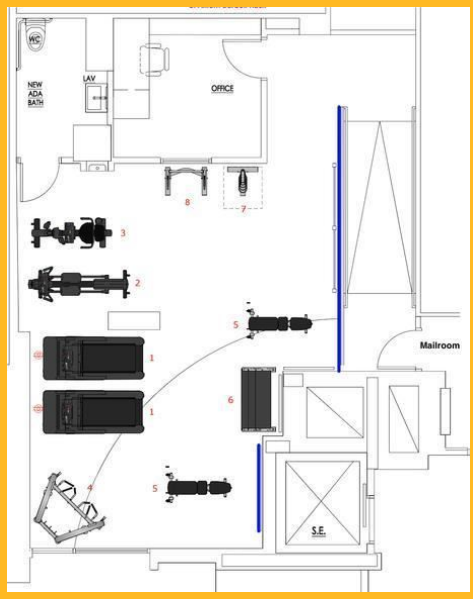

If you have not already done so, please email the board at robertlivingstonboard@gmail.com within the next two weeks with your feedback.



Planning to dress your pup up this Halloween?
Keep an eye out for an email with more details on a building Halloween pet parade!